SYLVANIA

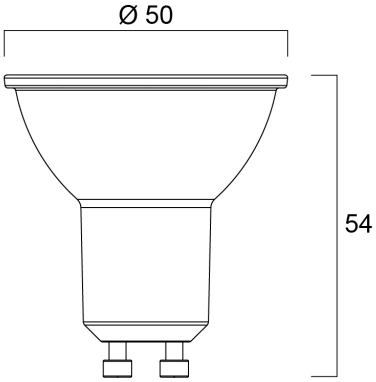
Ø 50
54