SYLVANIA

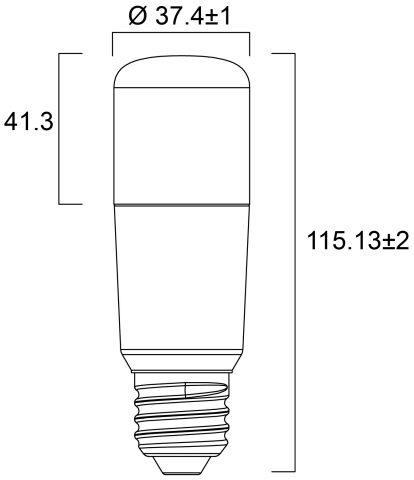
Ø 37.4±1
41.3
115.13±2