START Downlight 5in1 65-185 1750LM

Item No: 0053149

SYLVANIA

START™

START Downlight 5in1 is an integrated LED recessed / surface mounted downlight with built in non dimmable driver. Colour temperature (3000K, 4000K and 6500K) can be adjusted by a 3-way switch located on the back of the fixture. Adaptability to various cut-outs from 65mm to 185mm

Technical Assets

Dimensions (mm)

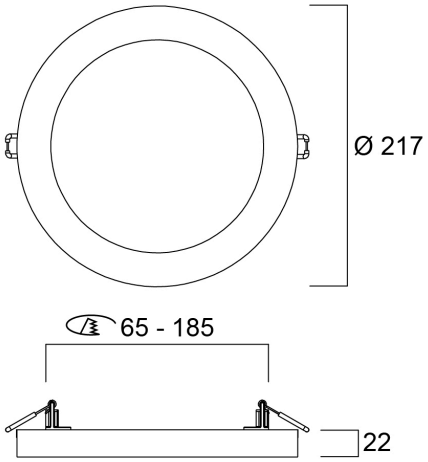

Photometrics

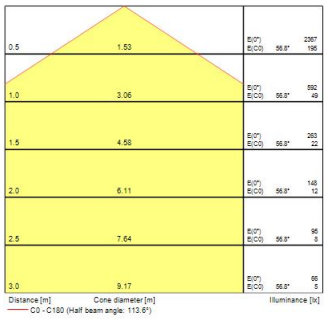

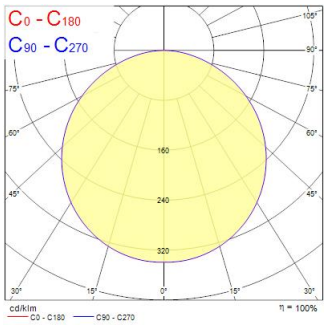

START Downlight 5in1 65-185 1750LM

Item No: 0053149

SYLVANIA

General data

Product name	START Downlight 5in1 65-185 1750LM
Technology	LED
Cap/Base	N/A
Housing	PC Polycarbonate
Mount	Ceiling recessed mounting, Ceiling surface mounting
Built in presence detector	NONE
General application	Residential & Consumer
Operating temperature range (°C)	-20°C...+40°C
Virtual assistant compatibility	N/A
ETIM Class	EC001744
E-number FI	4278427
Warranty	3 years

Optical data

Fixture luminous flux (lm)	1750
Luminaire efficacy (lm/W)	97
Light colour	N/A
CRI (Ra)	80
Colour Variation Initial (SDCM)	SDCM6
Beam Angle (°)	110
Distribution type	Symmetric
Glare control	< 28
Photobiological Risk Group	RG0

Electrical data

Total power consumption (W)	18
Primary Supply/Product voltage - min (V)	220.0
Primary Supply/Product voltage - max (V)	240.0
Lamp power factor	0.7
THD (at 230 V, 50 Hz, full load, at 100% dimming level) ≤ xx.x %	85.0
Electrical protection	Class II
Control gear type	LED driver constant current
Dimmable	No
Dimming method	N/A
Drive current (mA)	55
Inrush Current (A)	2
Inrush Duration (µs)	100
Energy Efficiency Class (A->G) of contained light source	E
Nominal Frequency (Hz)	50/60Hz
LED Flickering Rate	Low (6% - 20%)
Max. products per 16A C Breaker	62
Max. products per 16A B Breaker	34
Connectable conductor cross section - Min (mm^2)	0.75
Connectable conductor cross section - Max (mm^2)	1.5

Lifetime data

Lifespan L70 B50	55000
Lifespan L80 B10	30000

START Downlight 5in1 65-185 1750LM

Item No: 0053149

SYLVANIA

Physical data

Housing colour	RAL 9003 - Signal white
IP rating	IP20
IK rating	IK05
Diffuser finish	Opal
Diffuser material	PC Polycarbonate
Reflector finish	Not Applicable
Nominal Product Height (mm)	22
Nominal Product Diameter (mm)	217
Weight (kg)	0.413

Packaging

Product EAN number	5410288531496
Packaging single length / height (cm)	23.7
Packaging single width (cm)	4.3
Packaging single depth (cm)	22.7
DUN14 (inner)	15410288531493
Units per outer package	14
Packaging outer length / height (cm)	48.9
Packaging outer width (cm)	32.1
Packaging outer depth (cm)	25.2

Safety data

Glow Wire Test (°C)	650
Optimal operating condition (°C)	-20-40