BRUSHED CHROME BEZEL 301

Item No: 0053155

SYLVANIA

START

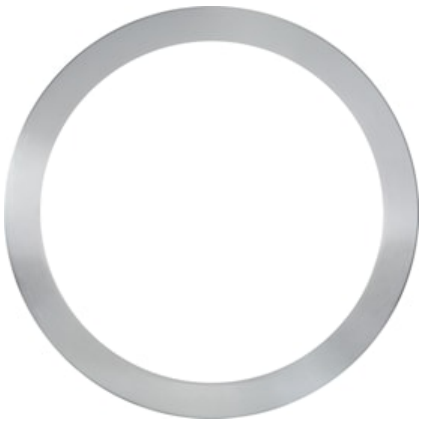

Brushed Chrome bezel as an optional accessory for START Downlight 5in1 . Can be attached to the product in a few seconds with the help of the twist and lock mechanism

Technical Assets

Dimensions (mm)

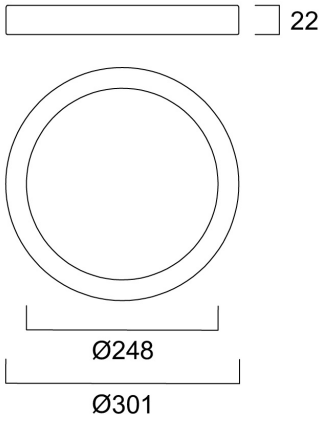

Photometrics

General data

Product name	BRUSHED CHROME BEZEL 301
Technology	LED
Type of accessory	Front ring
General application	Residential & Consumer
ETIM Class	EC002557
E-number FI	4278439
Warranty	3 years

Physical data

Nominal Product Height (mm)	22
Nominal Product Diameter (mm)	301
Weight (kg)	0.22

BRUSHED CHROME BEZEL 301

Item No: 0053155

SYLVANIA

Packaging

Product EAN number	5410288531557
Packaging single length / height (cm)	30.6
Packaging single width (cm)	2.7
Packaging single depth (cm)	30.6
DUN14 (inner)	15410288531554
Units per outer package	16
Packaging outer length / height (cm)	46.1
Packaging outer width (cm)	32.0
Packaging outer depth (cm)	33.1